Door Schedule									
Door Number	Door Type	Door Size	Phase Created	To Room: Name	Lock Set	Closer	Swing (PULL S.)	Frame Type	Glazing
2	34	36" x 84"	Existing	Mechanical	Entry	No	Right	Metal KD Jam	NONE
4	34	36" x 84"	Existing	Break RM	Entry	Yes	Right	Metal KD Jam	NONE
5	34	36" x 80"	Existing	Mechanical	Entry	No	Right	Metal KD Jam	NONE
6	34	36" x 80"	New Construction	AAB LAV	Privacy	Yes	Right	Metal KD Jam	NONE
7	105	34" x 80" 2	New Construction	Reception	Passage	Yes	Right	Metal KD Jam	3/4
9	105	34" x 80" 2	New Construction	Surgical RM	Passage	No	Right	Metal KD Jam	3/4
10	61	32" x 80"	New Construction	Private OF	Entry	No	Pocket	Pocket	1/2
11	105	34" x 80" 2	New Construction	Treatment RM 1	Passage	No	Right	Metal KD Jam	3/4
12	58	26" x 80"	New Construction	Treatment RM 1	Privacy	No	Pocket	Pocket	1/2
13	105	34" x 80" 2	New Construction	Treatment RM 2	Passage	No	Right	Metal KD Jam	3/4
14	58	26" x 80"	New Construction	Treatment RM 2	Privacy	No	Pocket	Pocket	1/2
15	105	34" x 80" 2	New Construction	Hygiene	Passage	No	Right	Metal KD Jam	3/4
17	106	34" x 80" 2	New Construction	Break RM	Passage		Left	Metal KD Jam	1/2
19	41	36" x 84"	New Construction						

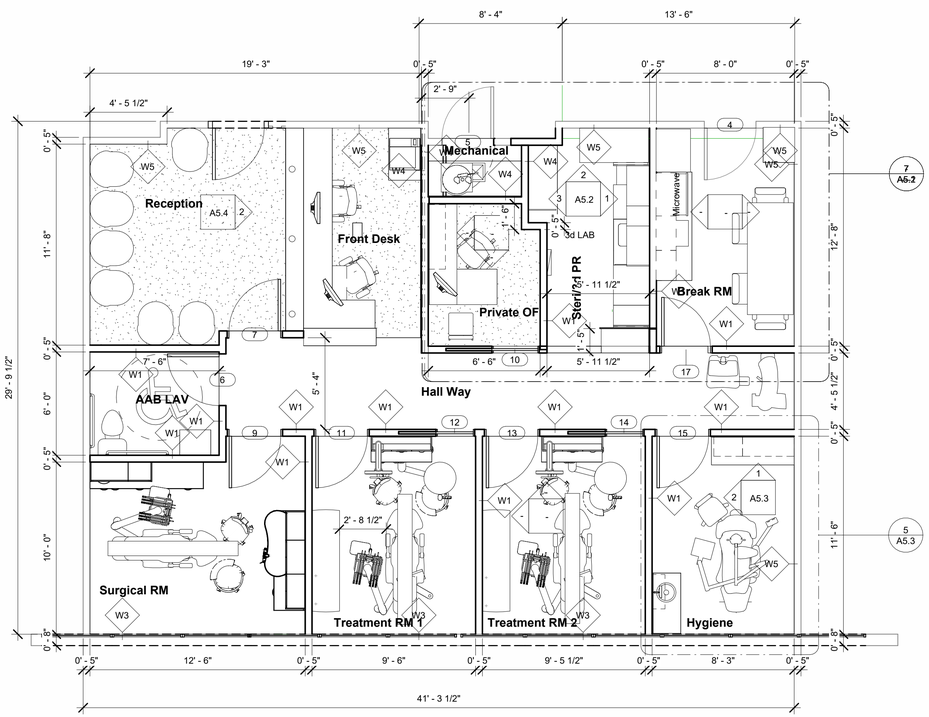

Coppelman Design Studio
Creating Dental Office Environments

No.	Description	Date

Plymouth Perio PLLC

45 RESNIK ST #3300 PLYMOUTH, MA

Floor Plan

Project number	092425
Date	9/15/25
Drawn by	EC
Checked by	Checker

A1

Scale	1/4" = 1'-0"

11/19/2025 1:42:04 PM

RCP SCHEDULE			
Type Mark	Model	Family and Type	Type Comments
AT101	MTA 5700 2X2	Metalaire 5700 24x24 - Revit 2015: 5700 - 24x24 - 10" Dia Neck	HVAC REGISTER
AT102		Square Return Register: 24" x 24"	HVAC RETURN
AT103	FV-0511VK2-50CFM-747RPM-3.5W	exhaust_fan-panasonic-whisper_green_select-(fv-0511vk2): FV-0511VK2-50CFM-747RPM-3.5W	EXHAUST FAN
C101		Compound Ceiling: GWB on Metal Stud	DRYWALL CEILING
C102		Compound Ceiling: 2' x 2' ACT System	ACCOUSTICAL CEILING 2'X2'
IT101		Electrical_Other_Tripp_Lite_SWR12USG: Default	IT Rack Enclosure
LT101	22CZS and 24CZS	Lighting-Troffer-Cooper-Metalux_Cruze_22CZS_24CZS_ST: See Type Catalog	2'X4' LED TROFFER
LT102	22CZS and 24CZS	Lighting-Troffer-Cooper-Metalux_Cruze_22CZS_24CZS_ST: See Type Catalog 22	2' x 2' LED TROFFER
LT103	DN572B	EURS_63_LF_FB_LuxSpace Square DN572B_PHI: Type catalog	4-6" SQUARE LED RECESSED
LT104		Pendant Lamp - Art Glass - LED: Standard	PENDANT LT TBD
SPK	SAROS-IC8T-W-T-EACH	Speaker-Crestron-Saros-2-Way_In-Ceiling: Saros 8" 2-Way In-Ceiling Speaker, White Textured, Single	CEILING MT. SPEAKER BY OTHER

Grand total: 73

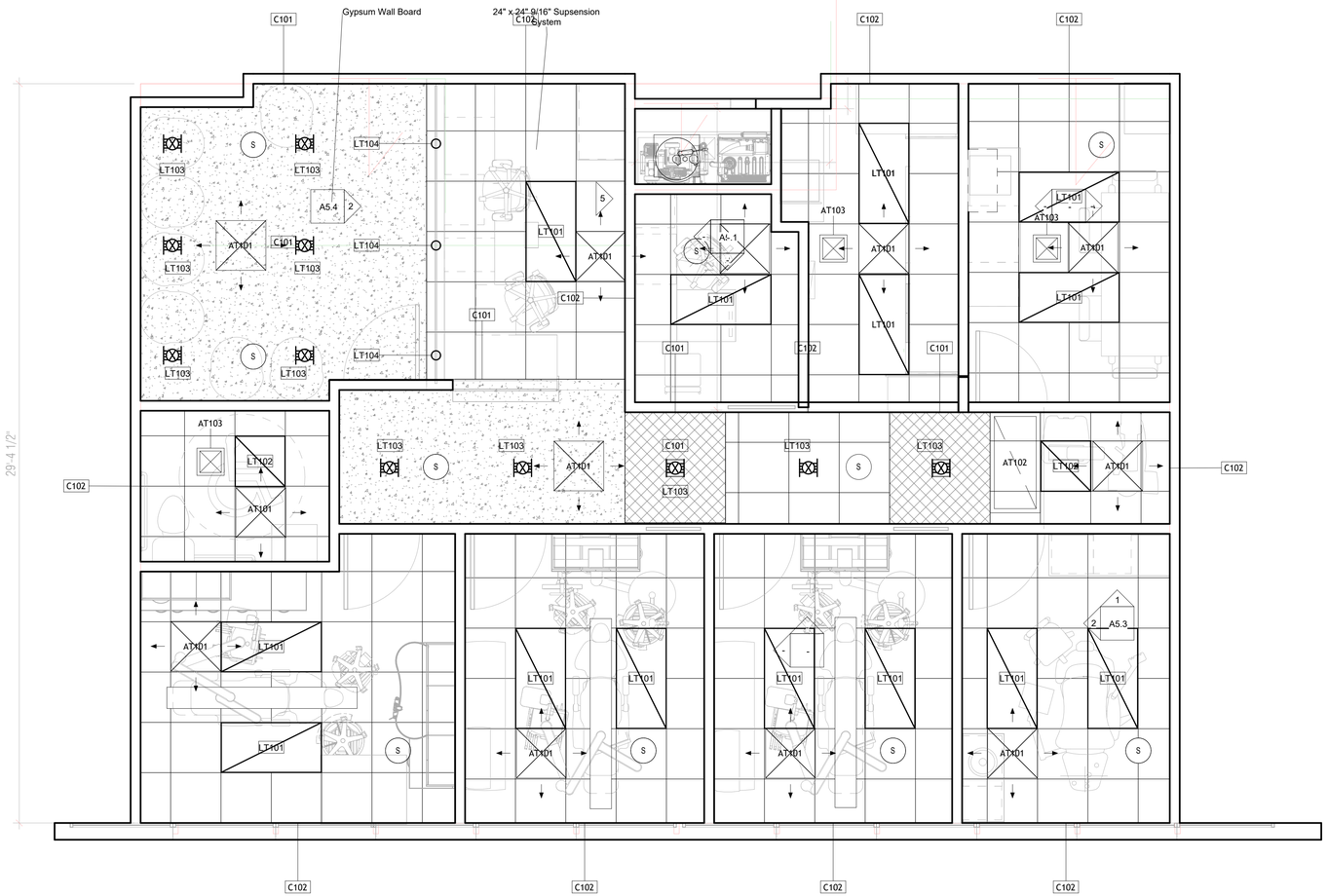

Coppelman Design Studio
Creating Dental Office Environments

No.	Description	Date

Plymouth Perio PLLC

45 RESNIK ST #3300 PLYMOUTH, MA

Reflected Ceiling Plan

Project number	092425
Date	9/15/25
Drawn by	Author
Checked by	Checker

A2

Scale 3/8" = 1'-0"

11/19/2025 1:42:05 PM

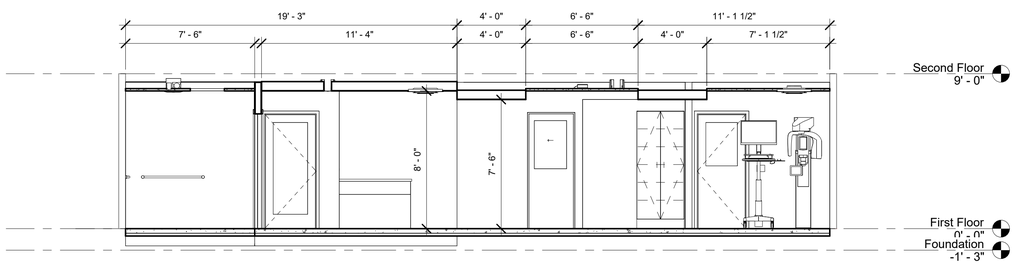

Wall Schedule							
Family and Type	Phase Created	Fire Rating	Type Mark	Unconnected Height	Top Constraint	Top Offset	COMMENT
Basic Wall: fd milled knee wall-4" 3	New Construction		PLAM 1	3' - 4 1/2"	Up to level: First Floor	3' - 4 1/2"	
Curtain Wall: FD Fascia	New Construction		SS 1	3' - 4 1/2"	Up to level: First Floor	3' - 4 1/2"	
Basic Wall: Interior - 4 3/4" Partition (1-hr)	New Construction		W1	8' - 0"	Unconnected	0' - 0"	
Basic Wall: Interior - 4 3/4" Partition (1-hr)	New Construction		W1	8' - 6"	Unconnected	0' - 0"	Steel Frame 5/8" Drywall 8: Batten Insulation Appprox 8.5' AFF
Basic Wall: Generic - 8"	Existing		W3	9' - 0"	Up to level: Second Floor	0' - 0"	EXTERIOR WALL PRFAB INT PANEL ON INSIDE TO BE COVERED WITH 1/4" GYPSUM. WINDOW TRIM TO BE EXTENDED WITH PAINTED TRIM
Basic Wall: Interior - 4 3/4" Partition (1-hr) SOUND B	New Construction		W4	<varies>	<varies>	0' - 0"	SURROUND INT OF MECHANICAL ROOM WITH
Basic Wall: Interior - 4 3/4" Partition (1-hr) 2 DEMISING WALL	<varies>		W5	<varies>	<varies>	<varies>	Check Interior for Panelling style Like W3

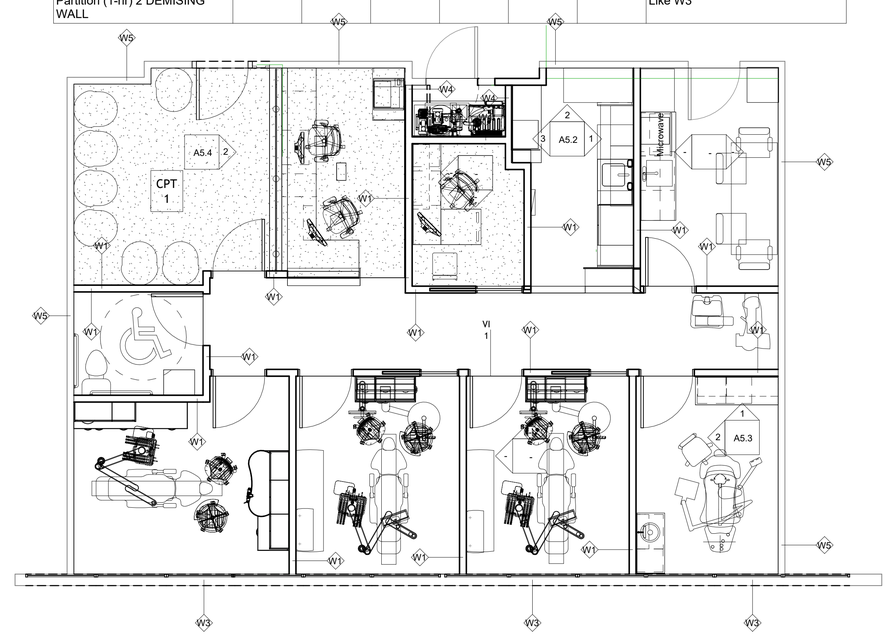

Refer to the Door Schedule for Swings, Hardware and Door Width's

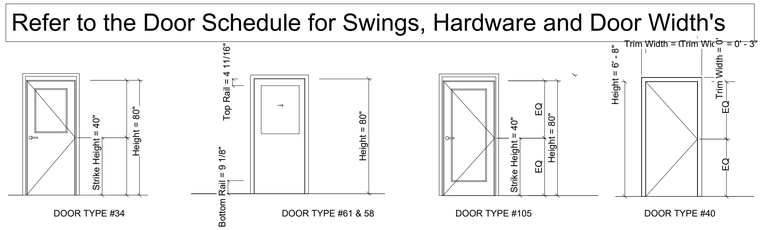

DOOR TYPE #34 | DOOR TYPE #61 & 58 | DOOR TYPE #105 | DOOR TYPE #40

Coppelman Design Studio
Creating Dental Office Environments

No.	Description	Date

Plymouth Perio PLLC

45 RESNIK ST #3300 PLYMOUTH, MA

Interior Details

Project number	092425
Date	9/15/25
Drawn by	EBC
Checked by	Checker

A3

Scale	1/4" = 1'-0"

11/19/2025 1:42:06 PM

WALL/PAINT SCHEDULE

Room Number	Room Name	PAINT		Comments
		Wall	Trim Paint	
1	Reception			
3	Private OF			
4	Steri/3d PR			
5	Break RM			
6	Hygiene			
7	Treatment RM 2			
8	Treatment RM 1			
9	Surgical RM			
10	AAB LAV			
13	Mechanical			
11	Imaging			
12	HALL			
14	Front Desk			
15	Hall Way			

Casework Schedule

Room: Name	Type Mark	Material Type	MFG	Product Numer	Hardware
Break RM	CTR 5	Plam			
Break RM	PLAM 6	Plam			
Break RM	Plam 6	Plam			
Front Desk	CTR1	Plam			
Front Desk	CTR 2	Soiid Surface			
Front Desk	PLAM 1	Plam			
Hygiene	CTR 8	Soiid Surface			
Hygiene	Plam 8	Plam			
Private OF	CTR 3	Plam			
Private OF	Plam 5	Plam			
Steri/3d PR	Plam 9	Plam			
Steri/3d PR	PLAM 11	Plam			

Flooring Schedule

Room Number	Room Name	Area	Floor	FLOORING				Comments
				Floor MFG	Floor Prod #	Base	Base MFG/Color	
1	Reception	136 SF	Carpet Tyle TBD			Johnsite MIII Work RB TBD		
3	Private OF	52 SF	Carpet Tyle TBD			Johnsite MIII Work RB TBD		
4	Steri/3d PR	79 SF	LVT TBD			Johnsite MIII Work RB TBD		
5	Break RM	101 SF	LVT TBD			Johnsite MIII Work RB TBD		
6	Hygiene	95 SF	LVT TBD			Johnsite MIII Work RB TBD		
7	Treatment RM 2	109 SF	LVT TBD			Johnsite MIII Work RB TBD		
8	Treatment RM 1	109 SF	LVT TBD			Johnsite MIII Work RB TBD		
9	Surgical RM	132 SF	LVT TBD			Johnsite MIII Work RB TBD		
10	AAB LAV	45 SF	Ceramic Tile TBD			Johnsite MIII Work RB TBD		
13	Mechanical	16 SF	LVT TBD			STD RB Base		
11	Imaging	22 SF	LVT TBD			Johnsite MIII Work RB TBD		
12	HALL	Not Placed	LVT TBD			Johnsite MIII Work RB TBD		
14	Front Desk	86 SF	Carpet Tyle TBD			Johnsite MIII Work RB TBD		
15	Hall Way	134 SF	LVT TBD			Johnsite MIII Work RB TBD		

Light Fixture Schedule

Family and Type	Type Mark	Model	Manufacturer
EURS_63_LF_FB_LuxSpace Square DN572B_PHI: Type catalog	LT103	DN572B	Philips
Lighting-Troffer-Cooper-Metalux _Cruze_22CZS_24CZS_ST: See Type Catalog	LT101	22CZS and 24CZS	Cooper Lighting
Lighting-Troffer-Cooper-Metalux _Cruze_22CZS_24CZS_ST: See Type Catalog 22	LT102	22CZS and 24CZS	Cooper Lighting
Pendant Lamp - Art Glass - LED: Standard	LT104		

Grand total: 30

Coppelman Design Studio
Creating Dental Office Environments

No.	Description	Date
1	Revision 1	Date 1

Plymouth Perio PLLC

45 RESNIK ST #3300 PLYMOUTH, MA

Schedules

Project number	092425
Date	9/15/25
Drawn by	Author
Checked by	Checker

A4

Scale

11/19/2025 1:42:06 PM

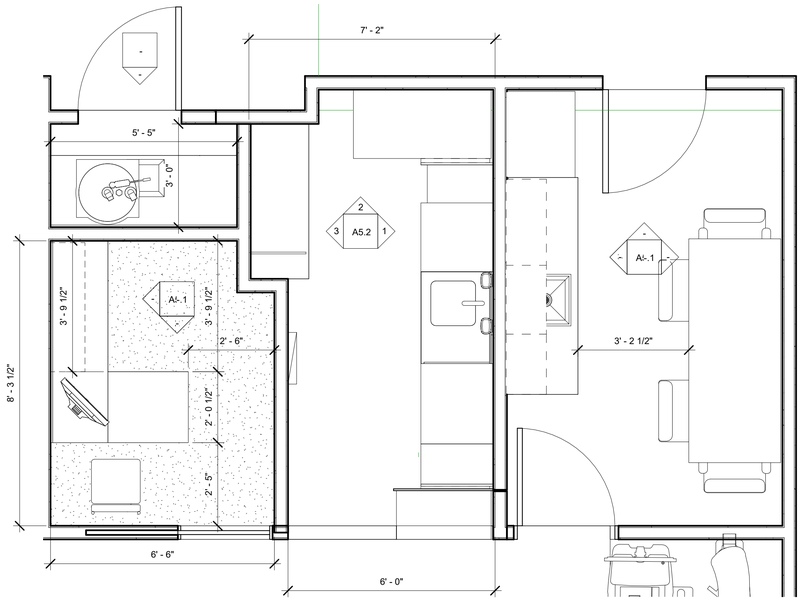

5
A5.2

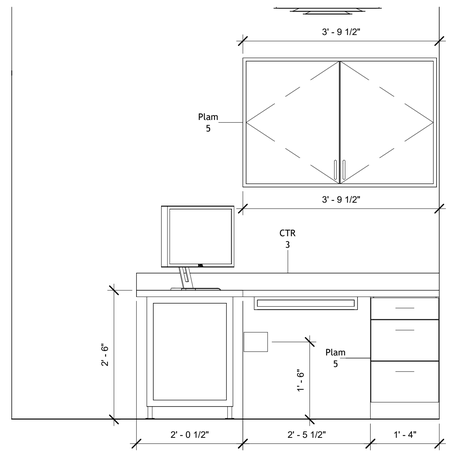

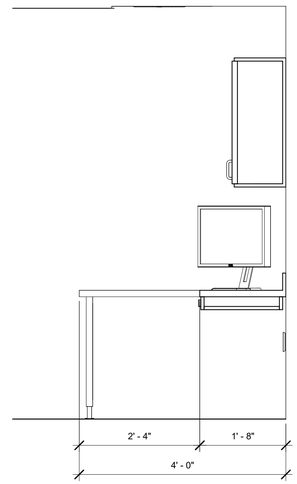

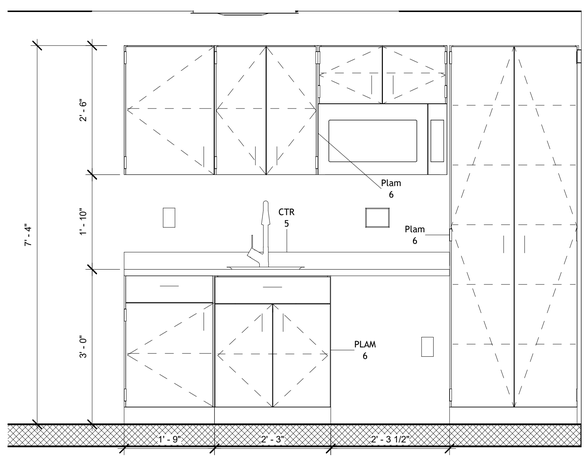

Private Office Casework Schedule

Room: Name	Type Mark	Type Comments	Product Material	Cabinet Finish
Private OF	CTR 3	PLam Work CTR		
Private OF	Plam 5	PO Uppers		
Private OF	Plam 5	PO Base Cabs		

Break Room Casework Schedule

Room: Name	Type Mark	Type Comments	Product Material	Cabinet Finish
Private OF	CTR 3	PLam Work CTR		
Private OF	Plam 5	PO Uppers		
Private OF	Plam 5	PO Base Cabs		

Coppelman Design Studio
Creating Dental Office Environments

No.	Description	Date

Plymouth Perio PLLC

45 RESNIK ST #3300 PLYMOUTH, MA

Interior Elevations

Project number	092425
Date	9/15/25
Drawn by	Author
Checked by	Checker

A5.1

Scale As indicated

11/19/2025 1:42:07 PM

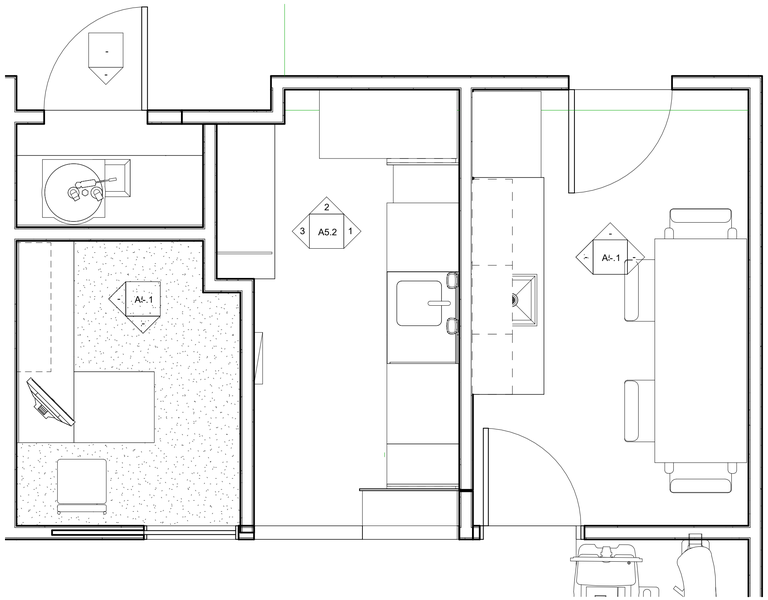

5
A5.2

Sterilization/3d lab Casework Schedule				
Room: Name	Type Mark	Type Comments	Product Material	Cabinet Finish
Steri/3d PR	Plam 9	Tall Cab Steri (Hallway)		
Steri/3d PR	PLAM 11	Tall Cab Steri (Inside)		

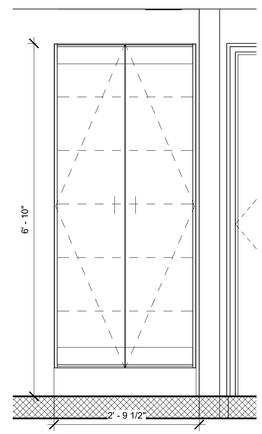

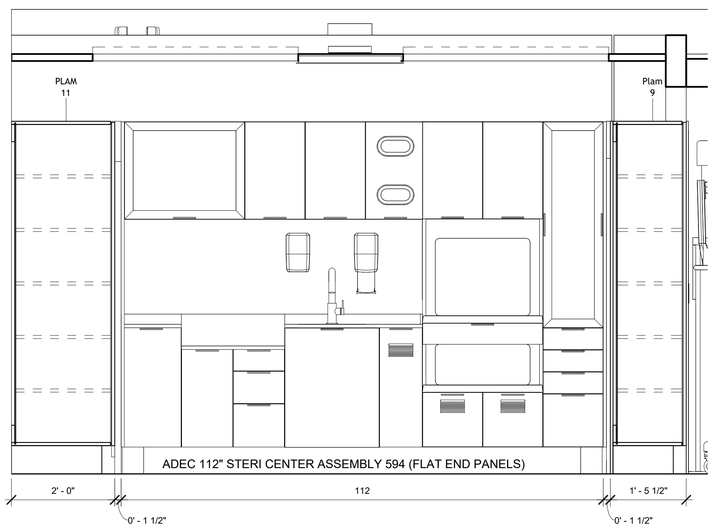

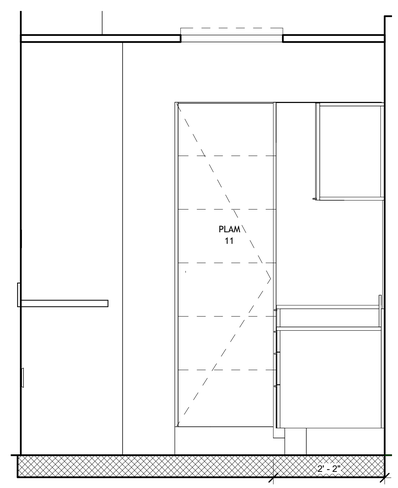

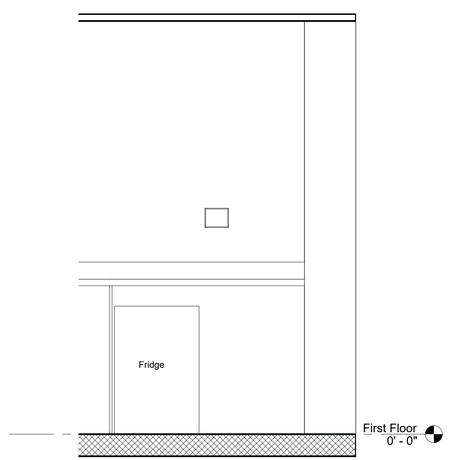

Coppelman Design Studio
Creating Dental Office Environments

No.	Description	Date

Plymouth Perio PLLC

45 RESNIK ST #3300 PLYMOUTH, MA

Sterilization/3d lab Elevations

Project number	092425
Date	9/15/25
Drawn by	Author
Checked by	Checker

A5.2

Scale	As indicated

11/19/2025 1:42:07 PM

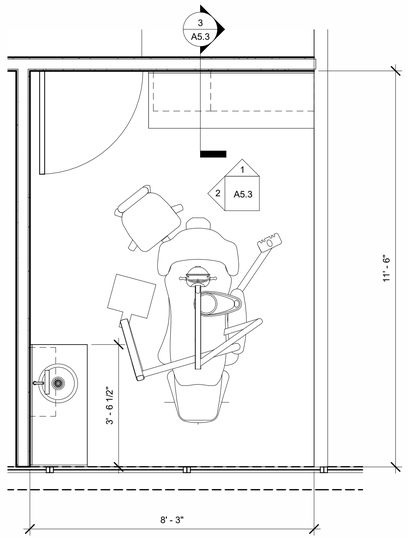

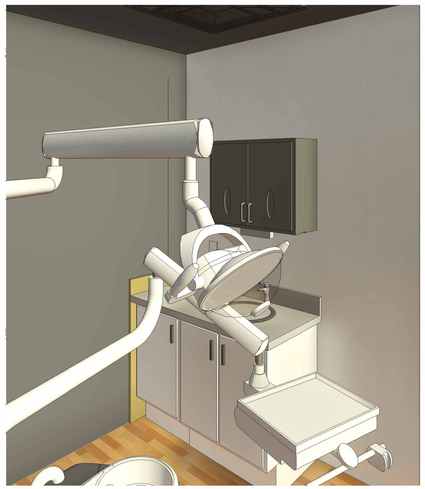

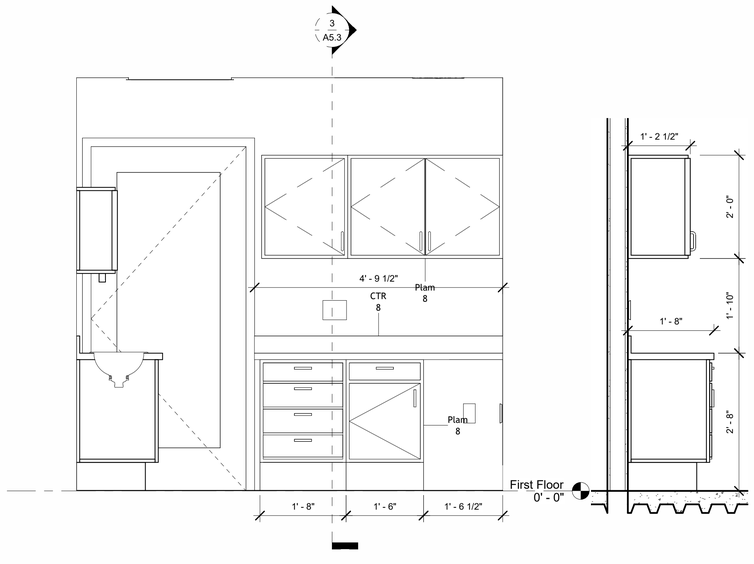

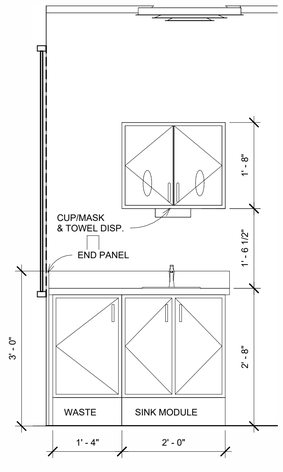

Hygiene Room Casework Schedule					
Room: Name	Type Mark	Type Comments	Product Material	Manufacturer	Model
Hygiene	CTR 8	Hygiene Counters			
Hygiene	Plam 8	Hygiene Base Cabs			
Hygiene	Plam 8	Hygiene Uppers			

Coppelman Design Studio
Creating Dental Office Environments

No.	Description	Date

Plymouth Perio PLLC

45 RESNIK ST #3300 PLYMOUTH, MA

Hygiene Rm Elevations

Project number	092425
Date	9/15/25
Drawn by	Author
Checked by	Checker

A5.3

Scale As indicated

11/19/2025 1:42:19 PM

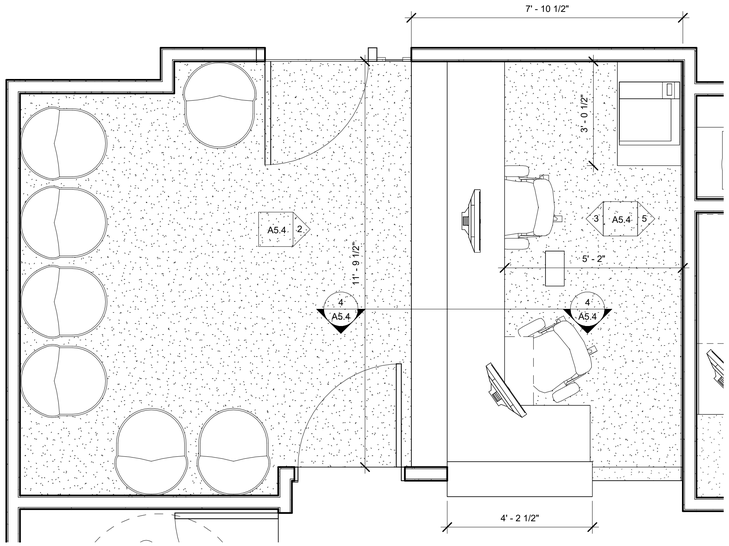

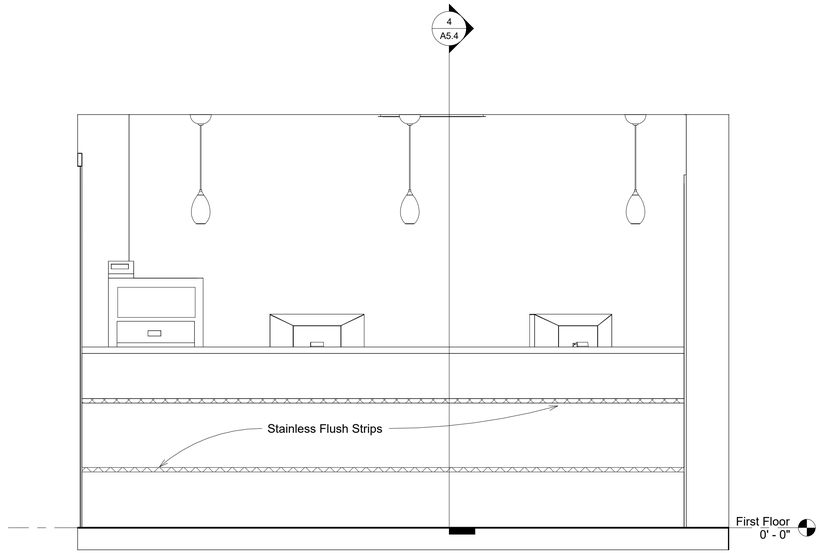

2 A3

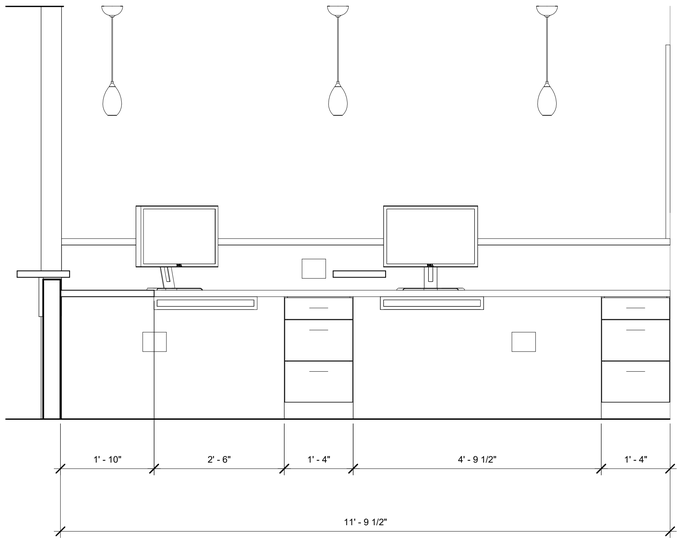

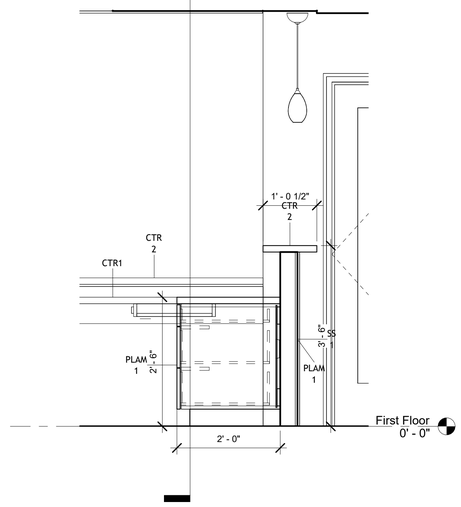

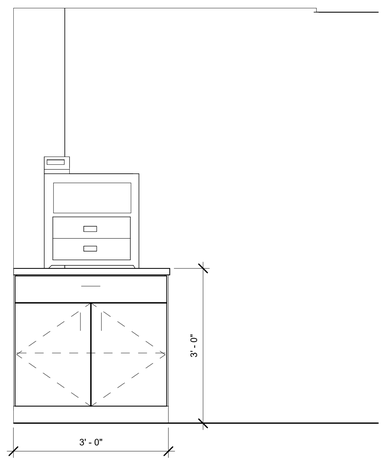

Coppelman Design Studio
Creating Dental Office Environments

No.	Description	Date

Plymouth Perio PLLC

45 RESNIK ST #3300 PLYMOUTH, MA

Interior Elevations

Project number	092425
Date	9/15/25
Drawn by	Author
Checked by	Checker

A5.4

Scale As indicated

11/19/2025 1:42:20 PM

AUTODESK

www.autodesk.com/revit

Consultant
Address
Address
Phone
Fax
e-mail

Consultant
Address
Address
Phone
Fax
e-mail

Consultant
Address
Address
Phone
Fax
e-mail

Consultant
Address
Address
Phone
Fax
e-mail

Consultant
Address
Address
Phone
Fax
e-mail

No.	Description	Date

Plymouth Perio PLLC
45 RESNIK ST #3300
PLYMOUTH, MA

Elevations

Project number	092425
Date	9/15/25
Drawn by	Author
Checked by	Checker

A7

Scale

11/19/2025 1:42:20 PM

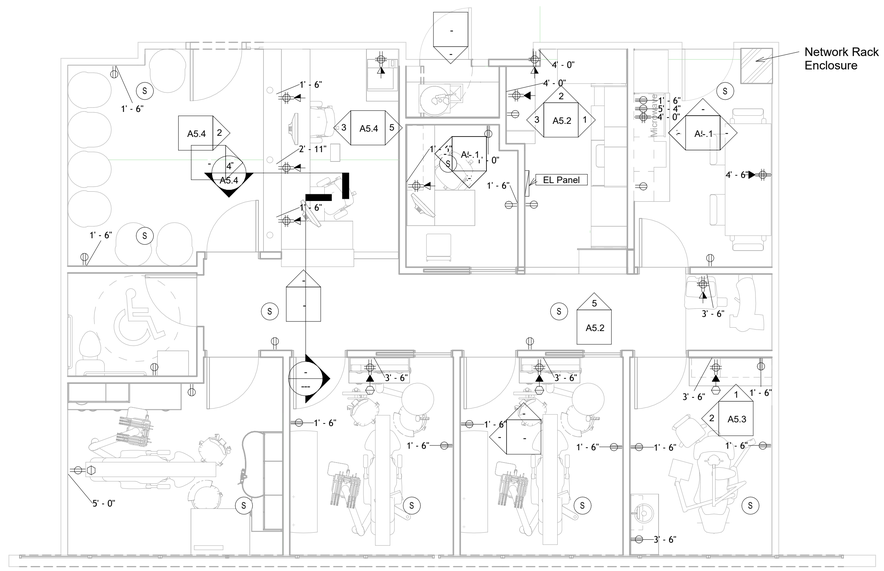

	HDMI RUN WITH COLLARED PLATE USE BI DIRECTIONAL HDMI CORD
	2 CAT 6 TERMINATED & LABELED ETHERNET DROPS RUN TO TRIPP LITE RACK PROVIDED BY OTHER
	1 CAT 6 TERMINATED & LABELED ETHERNET DROPS RUN TO TRIPP LITE RACK PROVIDED BY OTHER
	QUAD OUTLET STD (GROUND FAULTED WHERE REQUIRED BY CODE
	DUPLEX OUTLET STD (GROUND FAULTED WHERE REQUIRED BY CODE
	120V, 20 AMP DEDICATED OUTLET

Coppelman Design Studio
Creating Dental Office Environments

No.	Description	Date

Plymouth Perio PLLC

45 RESNIK ST #3300 PLYMOUTH, MA

Electrical

Project number	092425
Date	9/15/25
Drawn by	Author
Checked by	Checker

E1

Scale 1/4" = 1'-0"

11/19/2025 1:42:21 PM